TIMBER FRAMING

JOURNAL OF THE TIMBER FRAMERS GUILD

Number 121, September 2016

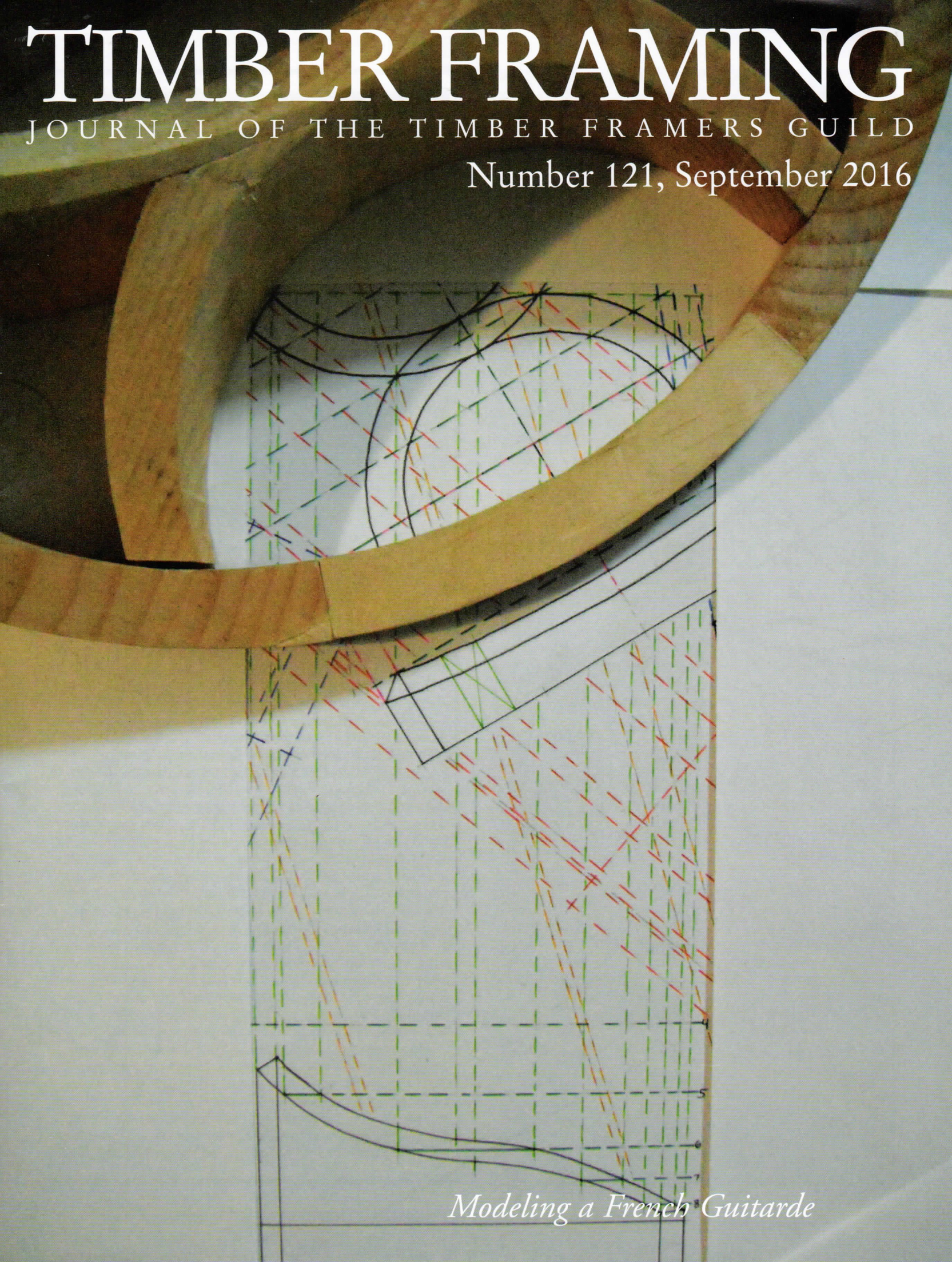

Modeling a French Guitarde

Keyed Through-Tenon Performance

KEYED through-tenon joints use an extended tenon secured by one or more wedges passing across it on the far side of a through-mortise. Such joints, also known as outside-wedged through-tenons, are sometimes found in kingpost trusses to join the kingpost to the bottom chord (Fig. 1). They are commonly found in New World Dutch barns joining the anchor beam to the posts in the characteristic H-bent (Fig. 2). Little engineering design literature exists for these joints.

Outside-wedged through-tenon joints are typically loaded in tension. Compared to pegged-only joints, their advantage is to eliminate tension failures perpendicular to the grain at the mortise face, because the keys are placed on the back of the mortise, causing compression forces at the face of the mortise.

Test specimens were fabricated from Douglas fir and white oak and tested to failure to identify potential failure modes (Figs. 3–7). Specimens with different tenon lengths (4 in. and 11 in.) were tested, as well as specimens with one key and two keys.

Test results indicated that proper detailing and proportioning of keyed through-tenon joints is crucial to their structural performance. Some test joints failed prematurely in a brittle fashion while others demonstrated ductile behavior, the latter a desirable attribute of structural joints.

Joints with relatively short tenons (4-in. projection) tended to fail when the relish behind the key mortises sheared off. Joints with long tenons (11-in. projection) did not exhibit this failure mode. Relish shear failures are a brittle failure mode to be avoided, thus it is crucial that tenons be long enough to preclude it.

A second brittle failure mode observed was splitting of the tenon, caused by tensile stress perpendicular to the grain of the tenon. This failure mode was only observed in joints that contained a single key. Joints with two keys did not exhibit splitting failures.

Keyed through-tenon joints that did not experience brittle relish shear or splitting failures behaved in a ductile fashion. The keys first crushed at their bearing surfaces and then progressed to a bending failure. Even after the keys fractured in bending, the joint continued to resist load, exhibiting ductile behavior. All of the joints tested used a single wedge as a key. Pairs of opposing wedges instead of a single wedge may be anticipated to result in improved bending resistance.

In analyzing the structural capacity of a keyed through-tenon joint loaded in tension, three failure modes should be evaluated:

1. Net tension strength of the tenon.
2. Relish shear resistance of the tenon at the key mortises.
3. Crushing strength of keys.

THE following guidelines for proportioning and maintaining keyed through-tenon joints are intended to minimize the likelihood of a brittle joint failure. Minimum dimensions are indicated and may need to be increased where required by structural calculations (Fig. 8).

1. The distance from the key mortise to the end of the tenon should not be less than 10 in.

2. A minimum of two keys should be used, each ideally consisting of opposing wedges.

3. Tenon thickness should be not less than 2 in.

4. Key mortises should be sized to allow for seasoning (shrinkage) of the tenon and consequent tightening around the keys.

5. Keys should be made from seasoned hardwood with a specific gravity not less than that of the timber.

6. As the mortised timber seasons and shrinks, keys must be tightened to keep the face of the joint closed.

Editor's note. This article was adapted from the Guild's Timber Frame Engineering Council's "Technical Bulletin 2016.8," a brief summary of extensive research done outside the Guild to quantify the strength of keyed through-tenon joints in timber. The bulletin was published in July and prepared by Daniel Hindman, Associate Professor in the Department of Sustainable Biomaterials at Virginia Tech, and Jim DeStefano, president of DeStefano & Chamberlain, Inc., and TFEC publications committee head for 2016. The original research on keyed through-tenon joints was conducted by Lance David Shields under the supervision of Professor Hindman and presented in June 2011 as an MS thesis in Civil Engineering under the title "Investigation of Through-Tenon Keys on the Tensile Strength of Mortise and Tenon Joints."

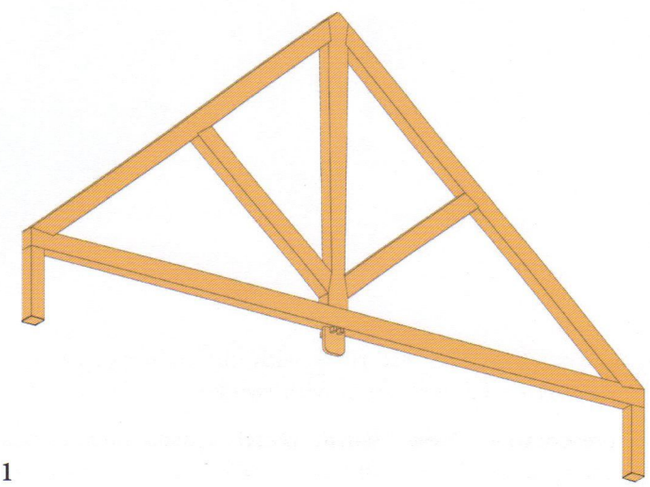

1

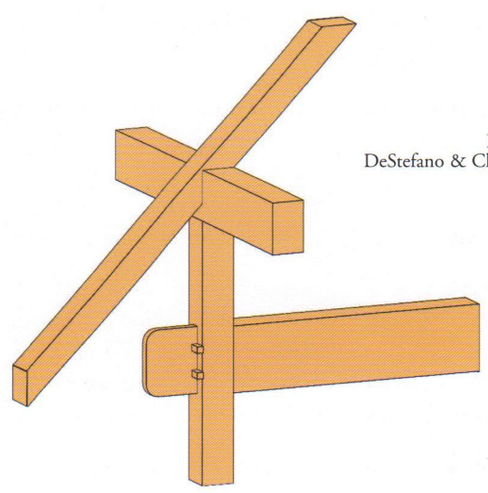

2

Renderings
DeStefano & Chamberlain

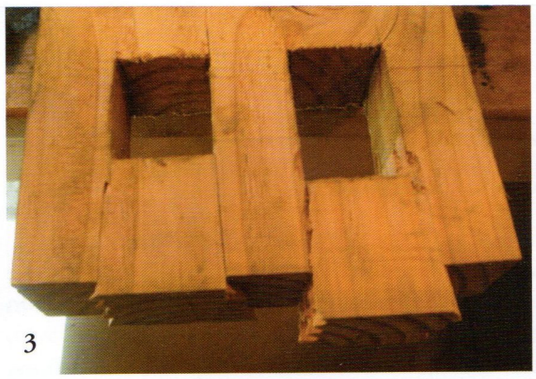

3

4

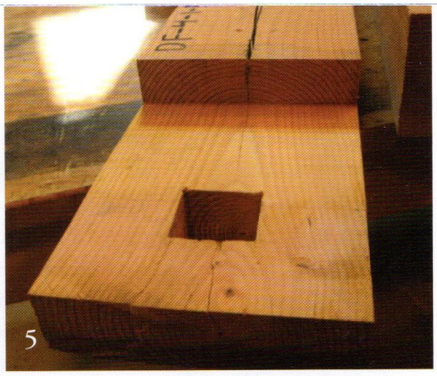

5

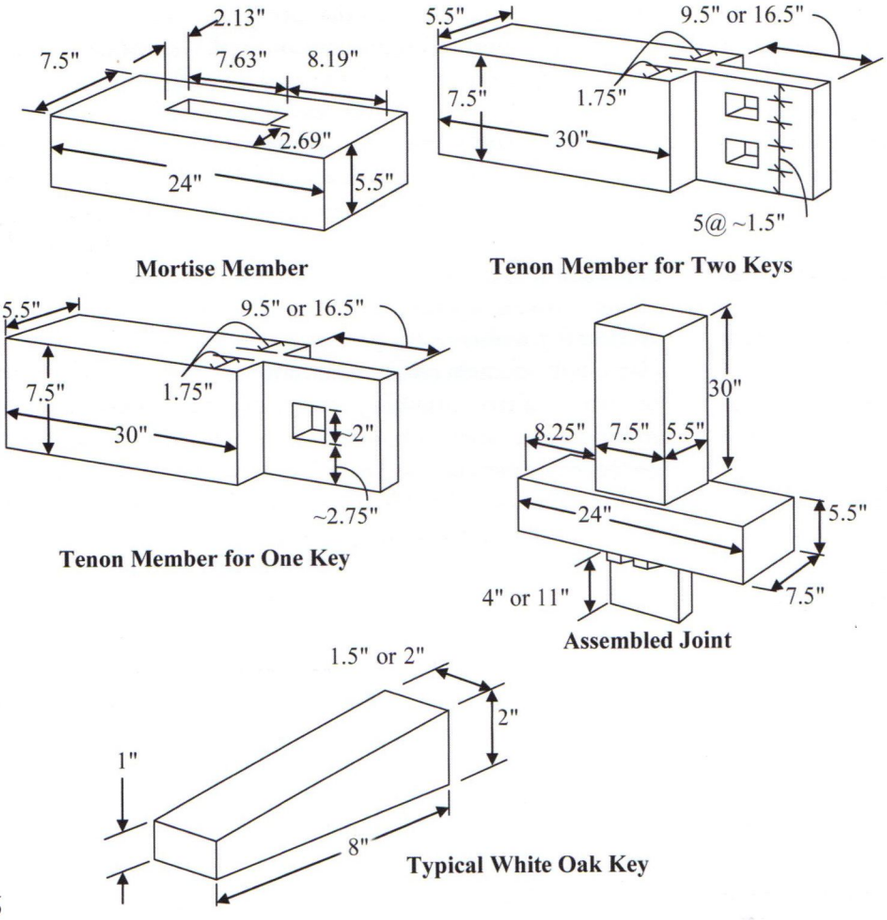

6

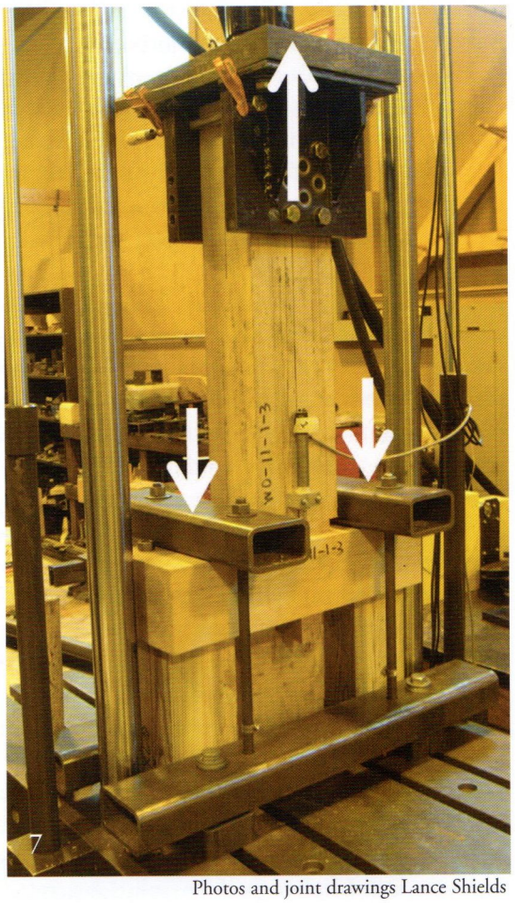

7

Photos and joint drawings Lance Shields

1 Representative kingpost truss with through mortise in tie beam and extended post tenon with two keys.

2 Representative New World Dutch barn anchor beam connection to purlin post with extended tenon and two keys.

3 Relish failure in shear along the grain in Douglas fir tenon with two keys and short relish.

4 Bending and crushing of white oak keys in long-relish white oak.

5 Tenon split in short-relish Douglas fir tenon with single key.

6 Configuration and dimensions of test joints. Not to scale.

7 MTS Servo-Hydraulic test apparatus with load cell range of 50,000 lbs. Lower white arrows indicate clamps holding mortised piece on blocks. Transducers with range of 2 in. and sensitivity of 0.001 in. are attached at opposite sides of joint to measure tenoned member slip relative to mortised member.

8 Keyed through-tenon recommended mortise end distance and dimensions. Hypothetical folding wedges not tested.

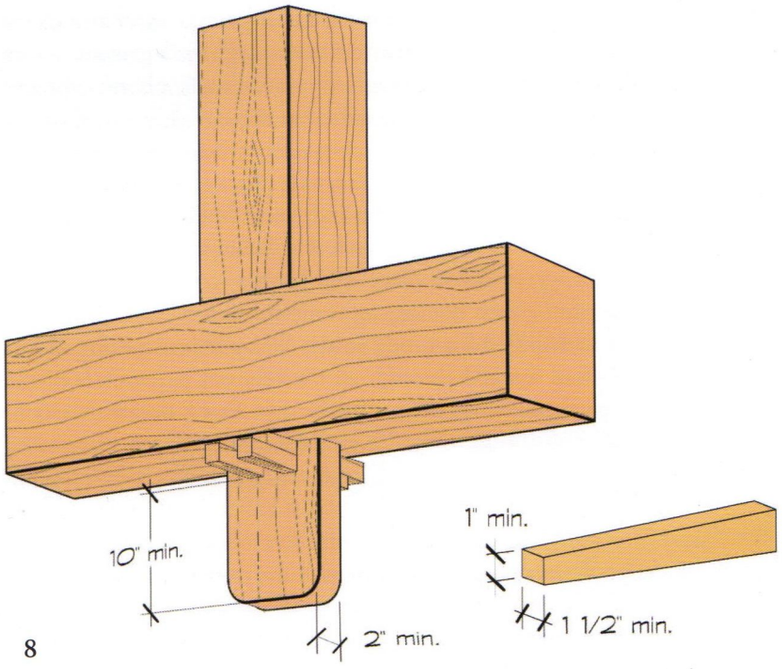

8